STAHLWILLE®

Crowring spanners, metric

440

Product no.	**01190010**
GTIN	**4018754000739**
Model	**440 10**

Label. 1/4 " Crowring spanner Size 10mm L.28.4mm

Properties.

- bi-hex with AS-Drive profile
- Chrome Alloy Steel, chrome-plated

Technical drawing.

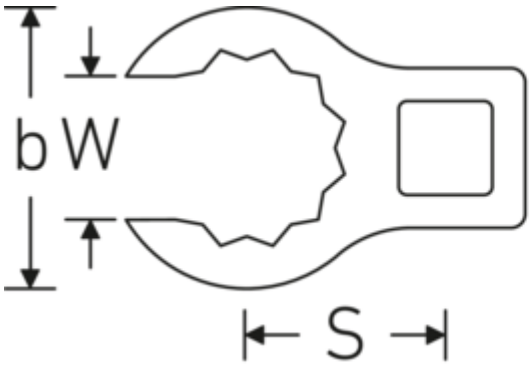

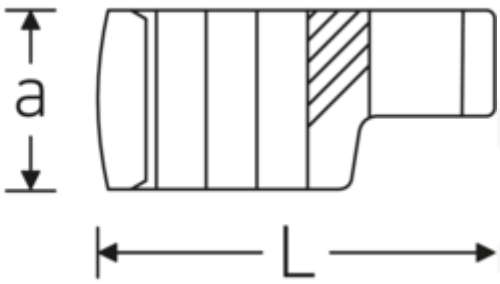

Technical attributes.

Size [mm]	10 mm
Square drive inner (inch)	1/4 "
Length mm (L)	28,4 mm
Width mm (b)	18,2 mm
a	13,5 mm
Alloy	Chrome Alloy Steel, chrom plated

Logistics data.

Product no.	01190010
GTIN	4018754000739
Weight (g)	16 g
Volume (packaged, dm3)	0.008265 dm3
Packing standard	10
WEEE/ElektroG	nicht ear-pflichtig
Customs tariff no.	82042000

S	14 mm
W	7,1 mm

Country of origin AWR	GERMANY
Region of origin	Nordrhein-Westfalen
Depth mm (IFS)	28
Width mm (IFS)	18
Height mm (IFS)	14
Weight (gross, kg)	0,160
Weight PAP (kg)	0,000
Weight PVC (kg)	0,002
Length (packaged, mm)	29
Width (packaged, mm)	19
Height (packaging, mm)	15

GTIN.

4 018754 000739

Images.

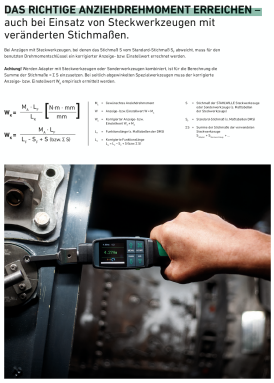

© STAHLWILLE Eduard Wille GmbH, Wuppertal