STAHLWILLE®

Open-ended striking spanners

4204

Product no.	**42040100**
GTIN	**4018754023813**
Model	**4204 100**

Label. Open-ended striking spanner Size 100mm L.485mm

Properties.

- special steel, steel grey
- DIN 133

Technical drawing.

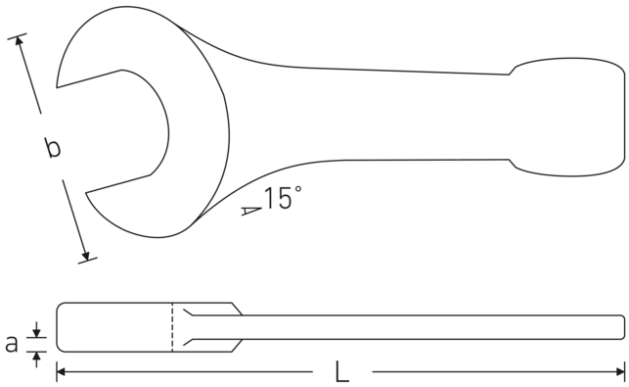

Technical attributes.

Size 1 [mm]	100 mm
Length mm (L)	485 mm
Width mm (b)	215 mm
a	44 mm
DIN	DIN 133
Alloy	Special steel
Surface	steel grey

Logistics data.

Product no.	42040100
GTIN	4018754023813
Weight (g)	11500 g
Volume (packaged, dm3)	4.5881 dm3
Packing standard	1
WEEE/ElektroG	nicht ear-pflichtig
Customs tariff no.	82041100

Country of origin AWR	GERMANY
Region of origin	Nordrhein-Westfalen
Depth mm (IFS)	485
Width mm (IFS)	215
Height mm (IFS)	44
Weight (gross, kg)	11,500
Weight PAP (kg)	0,000
Weight PVC (kg)	0,000
Length (packaged, mm)	485
Width (packaged, mm)	215
Height (packaging, mm)	44

GTIN.

4 018754 023813

STAHLWILLE Eduard Wille GmbH
Lindenallee 27 · 42349 Wuppertal · Germany · Phone: +49 202 4791-0
info@stahlwille.de · www.stahlwille.com
© STAHLWILLE Eduard Wille GmbH, Wuppertal