STAHLWILLE®

Open-ended striking spanners

4204

Product no.	**42040036**
GTIN	**4018754023684**
Model	**4204 36**

Label. Open-ended striking spanner Size 36mm L.215mm

Properties.

- special steel, steel grey
- DIN 133

Technical drawing.

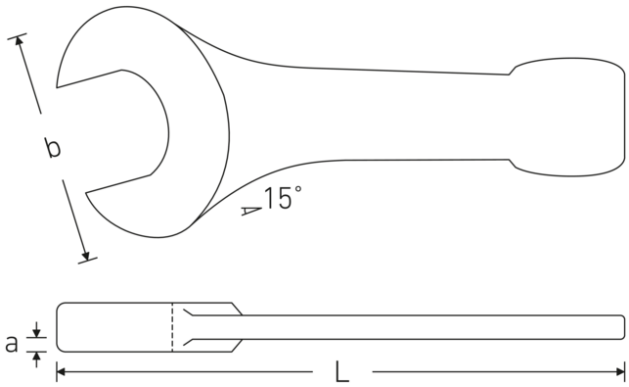

Technical attributes.

Size 1 [mm]	36 mm
Length mm (L)	215 mm
Width mm (b)	76 mm
a	17,5 mm
DIN	DIN 133
Alloy	Special steel
Surface	steel grey

Logistics data.

Product no.	42040036
GTIN	4018754023684
Weight (g)	698 g
Volume (packaged, dm3)	0.303525 dm3
Packing standard	1
WEEE/ElektroG	nicht ear-pflichtig
Customs tariff no.	82041100

Country of origin AWR	GERMANY
Region of origin	Nordrhein-Westfalen
Depth mm (IFS)	213
Width mm (IFS)	75
Height mm (IFS)	19
Weight (gross, kg)	0,698
Weight PAP (kg)	0,000
Weight PVC (kg)	0,000
Length (packaged, mm)	213
Width (packaged, mm)	75
Height (packaging, mm)	19

GTIN.

4 018754 023684

STAHLWILLE Eduard Wille GmbH
Lindenallee 27 · 42349 Wuppertal · Germany · Phone: +49 202 4791-0
info@stahlwille.de · www.stahlwille.com
© STAHLWILLE Eduard Wille GmbH, Wuppertal